Product Name	Tape Light Slim	Scale	1:2 (A4)

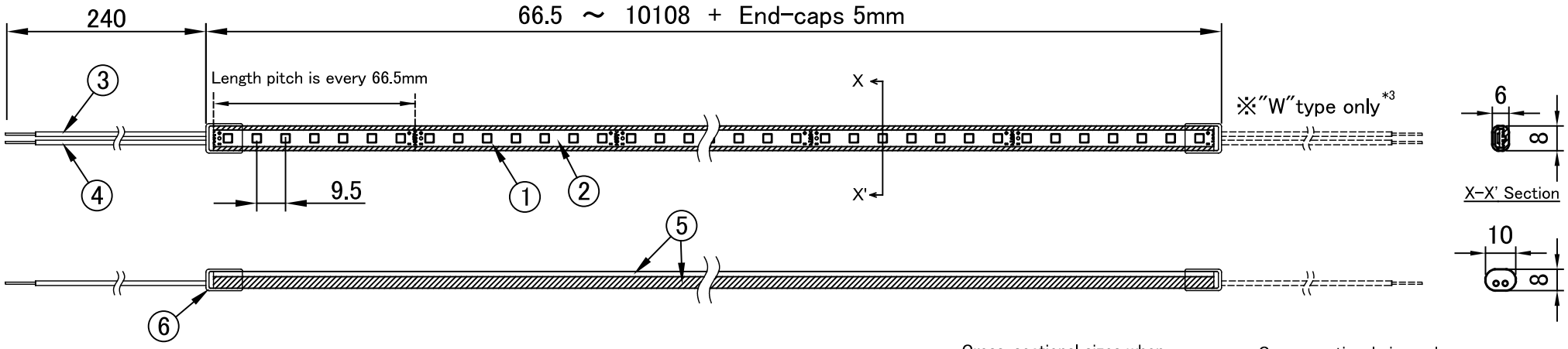

Cross-sectional sizes when installed with FJS00-TS01 (1:1)

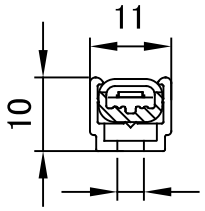

Cross-sectional sizes when installed with FJB20-TS01 (1:1)

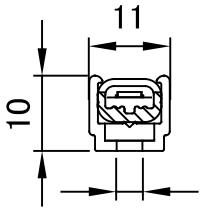

※When connecting products and power supplies in parallel in multiple systems,
make sure that the types and lengths of the wires in each system are the same to prevent differences in brightness and color between the products.

Third-angle projection method (Unit : mm)

Product Specifications

Product No.	2200K～5000K:TLS-□□K*1 ("W" type:TLS-□□KW)					Mono Color:TLS-□*2 ("W" type:TLS-□W)			
Length	66.5mm ～ 10108mm + End-caps 5mm					66.5mm ～ 10108mm + End-caps 5mm			
Weight	60g/m					60g/m			
Input Voltage	DC24V					DC24V			
Power Consumption	5W/m					8W/m			
Color Temperature	2200K	2500K	2800K	3000K	3500K	4000K	5000K	RED	BLUE
Luminous Flux	360lm/m	450lm/m	490lm/m	510lm/m	560lm/m	590lm/m	580lm/m	280lm/m	160lm/m
Beam Angle	130°								
Operating Temperature	-10 ～ 55℃								
Environment	Indoor / Outdoor (IP67 rated)								
Bending Radius	30mm vertical								
Max Unit Connectable	10.1m (10108mm + End-caps)								
Note	*1 "□□" means the first two digits of the color temperature of the product.								
	*2 "□" means the initial letter of mono color. (e.g. "R" means Red, "B" means Blue. ※"Y" : Yellow is custom order)								
	*3 "(Standard)"type : Lead wires at one end. "W"type : Lead wires at both ends.								

	Parts Name	Material	Note
8			
7			
6	End Cap	Silicone rubber	Translucent
5	Case	Silicone rubber	Clear
4	Lead Wire (V-)	Silicone rubber coating	Black, AWG24
3	Lead Wire (V+)	Silicone rubber coating	Red, AWG24
2	FPC	Polyimide	Flexible Printed Circuits
1	LED	SMD LED	

Accessories (Option)

1	Polycarbonate Rigid Channel (Length=1000mm for straight line installations) : FJS00-TS01
2	Polycarbonate Mounting Bracket (Length=20mm for flexible line installations、5 pcs per pack) : FJB20-TS01
3	
4	
5	

3D

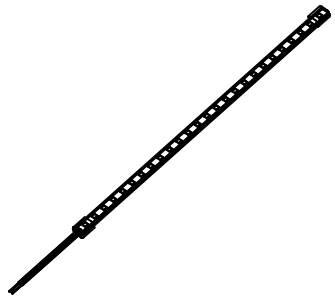

Drawn	Reviser	Approved
Yamaguchi	Shiokawa	Yamaguchi
2020.4.1	2023.3.20	2023.3.20

Please note that content descrided above may be changed without any advance notice

Atex Co.,Ltd

Ver 230320