Product Name	LONG SILICONE LIGHT RGB COLOR (GL-F)	Scale	1:2 (A4)

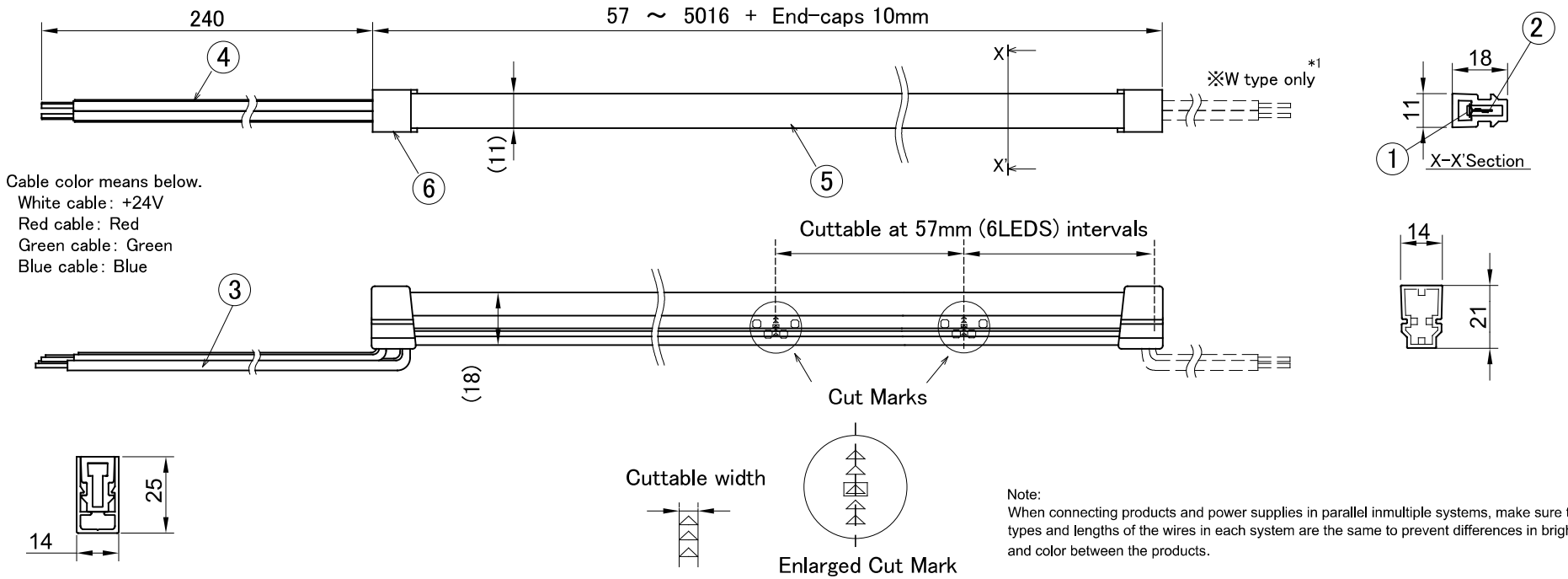

Cross-sectional sizes when installed with FAC20-01GD / FAS00-01GD

Note:
When connecting products and power supplies in parallel inmultiple systems, make sure that the types and lengths of the wires in each system are the same to prevent differences in brightness and color between the products.

Third-angle projection method (Unit: mm)

Product Specifications	
Product No. *1	GL-F
Length	57mm ～ 5016mm + End-caps 10mm
Weight	180g/m
Input Voitage	DC24V
Power Consumption	10W/m(Red:4.6 / Green:3.3 / Blue:2.5 W/m)
Color Temperature	Red, Green, Blue, and mixed colors
Luminous Flux	Red:110 lm/m, Green:230 lm/m, Blue:40 lm/m
Beam Angle	120°
Operating Tmperature	−10 ～ 55℃
Operating Environment	Indoor / Outdoor (IP67 rated)
Minimum Bending Radius	R60 mm (Horizontal)
Max Unit Connectable	10.1m (5016mm x 2 + End-caps)
Note	*1 "(Standard)" type : Lead wires at one end. "W" type : Lead wires at both ends.

	Parts Name	Material	Note
8			
7			
6	End cap	Silicone rubber	Translucent
5	Case	Silicone rubber	Translucent
4	Lead Wire(V−)	Silicone rubber coating	Red, Green, Blue, AWG20 (0.5sq)
3	Lead Wire(V+)	Silicone rubber coating	White, AWG20 (0.5sq)
2	FPC	Polyimide	
1	LED	SMD LED	

Accessories (Option)

1	Aluminum channel for straight line (L = 1000 mm) : FAS00-01GD
2	Aluminum channel for curvy line (L = 1000 mm) : FAC20-01GD
3	End cap : EC111-01
4	
5	

3D

Design	Check	Approve
Hashimoto		Yamaguchi
2021.09.02		2022.05.11

Please note that the contents described above may be changed without any advance notice.

Atex Co.,Ltd.

Ver 220511